Table of Contents

Force

Force is an act of pulling and pushing. Anything that involves pushing and pulling is called force.

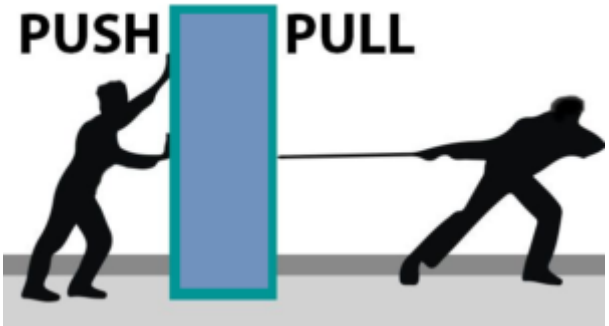

There are many types of forces. The table below shows the common types of force

Name	Explanation
Frictional force	Rub two surface together, this will create a frictional force
Electrical force	Force from two charge bodies. The forces created from either positive or negative electrical charge.
Magnetic force	Force produced from the polarity of the magnetic field.
Tension force	Force produced when objects experience stretch
Gravitational force	Force produced by gravity

All forces are measured in **Newton (N)**. The person who discovered and studied force is Sir Isaac Newton.

Formula of Forces , F = ma ; given that m = mass of an object and a = acceleration of the object

Forces	Formula
Gravitational force	Weight (W) = mg ; m= mass , g = gravity
Spring force	Elastic force F= $\frac{1}{2}kx^2$; k= spring constant, x extension of the spring
Force of a moving object	Force moving object F = ma ; m = mass, a = acceleration

Potential Energy and Kinetic Energy

$$KE = \frac{1}{2} mV^2 \quad PE = mgh$$

- **Potential energy** is the energy held by an object because of its position relative to other objects.
- Kinetic energy is **the energy an object has because of its motion**.(Energy derived from a moving object)

Question 1

You serve a volleyball with a mass of 2.1 kg. The ball leaves your hand with a speed of 30 m/s. The ball has _____ energy. Calculate it.

Solution :

Moving the ball, it has **kinetic energy.**

$Kinetic\ energy = \frac{1}{2}mv^2 = \frac{1}{2} \times 2.1 \times (30)^2 =$ 945J

Question 2

A baby carriage is sitting at the top of a hill that is 21 m high. The carriage with the baby has a mass of 1.5 kg. The carriage has _____ energy. Calculate it.

Solution:

Question 3

A car is traveling with a velocity of 40 m/s and has a mass of 1120 kg. The car has _____ energy. Calculate it.

Solution:

Question 4

A cinder block is sitting on a platform 20 m high. It weighs 7.9 kg. The block has _____ energy. Calculate it.

Solution

Moment

Moment is defined as force multiplied by distance

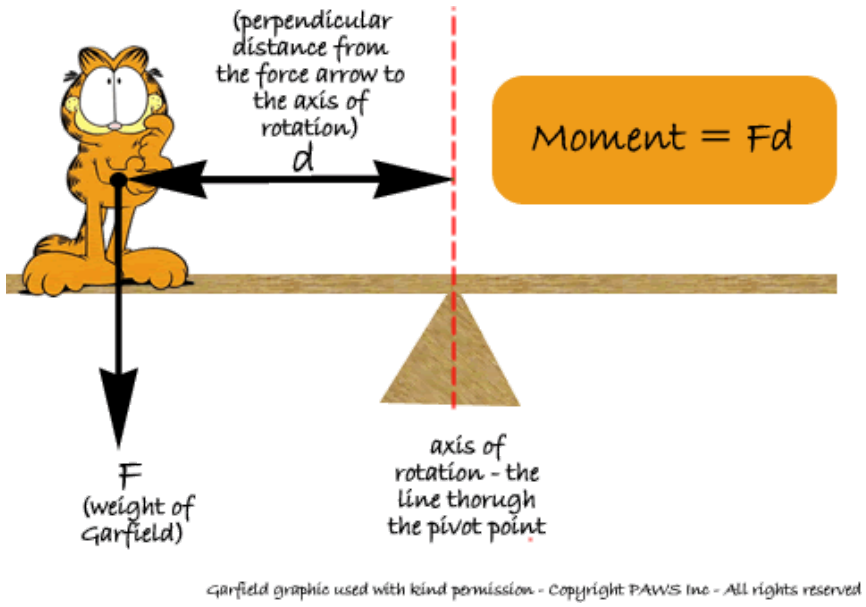

Solve the following question
Find the value of W?

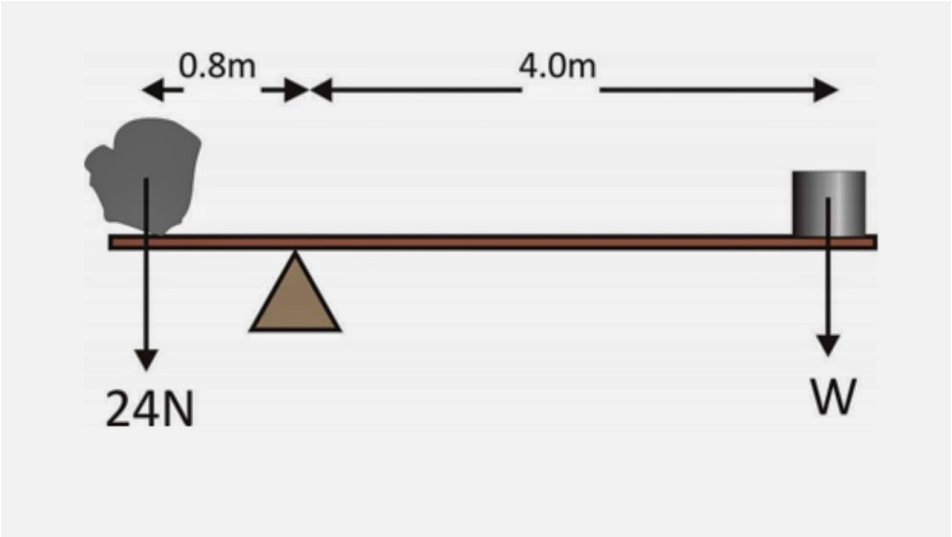

Solution

Moment Left = Moment Right

$F_1 d_1 = F_2 d_2$

24 x 0.8 = W x 4

19.2 = 4W

W = 19.2/4

W = 4.8N

Spring

Spring is a coil of metal that is elastic. A spring is able to stretch and return back to its original position

A spring as the elastic property as long as it obeys the

Hooke's Law.
Hooke's law states that the applied force F equals a constant k times the displacement or change in length x, or **F = kx. ;k = spring constant while x = elongation of the spring.**

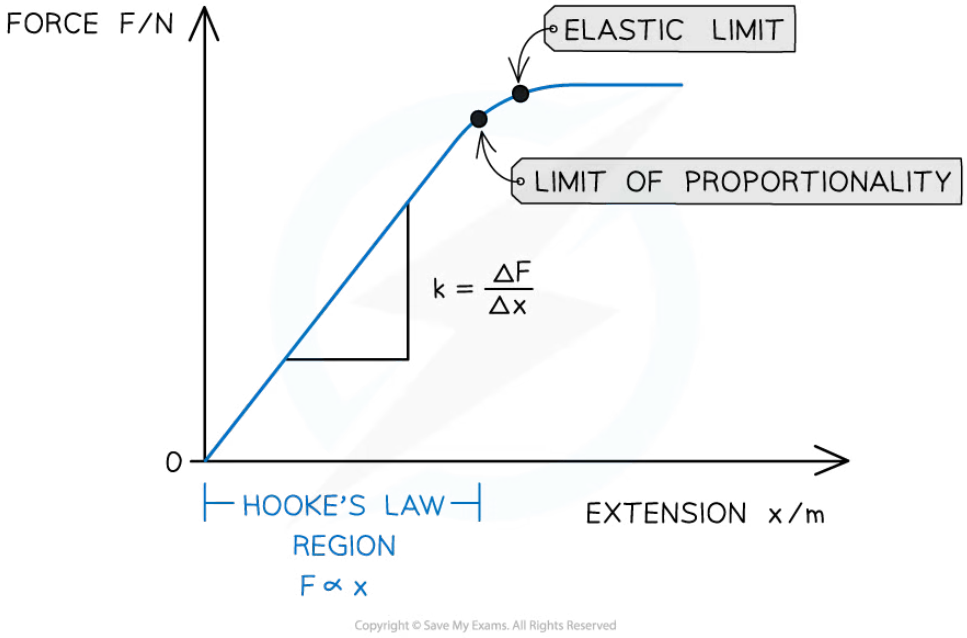

- The key features of the graph are:
  - **The limit of proportionality:** The point beyond which Hooke's law is **no longer true** when stretching a material i.e. the **extension is no longer proportional to the applied force**
    - The point is identified on the graph where the line starts to curve (flattens out)
  - **Elastic limit:** The maximum amount a material can be stretched and still return to its original length (above which the material will **no longer be elastic)**. This point is always after the limit of proportionality
    - The gradient of this graph is equal to the spring constant *k*

Describe the type of energy

Energy	Describe
Geothermal	What is geothermal energy? **Geothermal energy** is the thermal energy in the Earth's crust which originates from the formation of the planet and from radioactive decay of materials How to harvest the geothermal energy? Geothermal power plants, which use heat from deep inside the Earth to generate steam to make electricity. Is this renewable or non renewable energy? Renewable energy Is this reliable energy? **It is reliable** — Geothermal power plants produce electricity consistently, running 24 hours per day / 7 days per week Picture of a Geothermal power station? 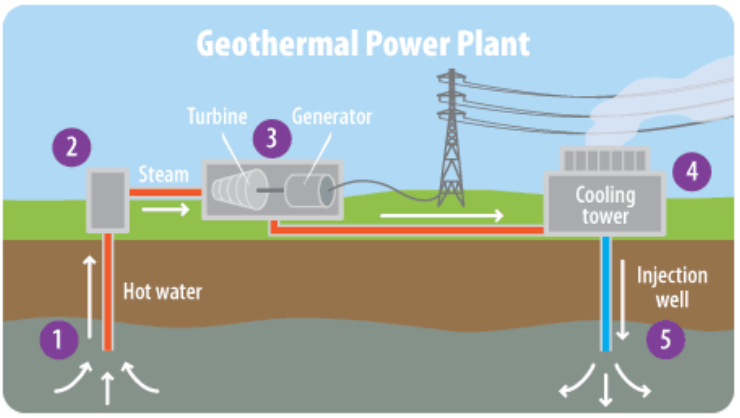
Wave	What is wave energy? Wave energy is a form of renewable energy that can be harnessed from the motion of the waves. How to harvest the wave energy? Ocean wave energy is harvested by film-type generators Is this renewable or non renewable energy? Renewable Is this reliable energy? yes Picture of a wave power station?
Wind	What is wind energy? electrical energy obtained from harnessing the wind with windmills or wind turbine How to harvest the wave energy?

	Wind is harvested through wind turbines, which generate electricity by converting the kinetic energy of the wind into mechanical energy. Is this renewable or non renewable energy? Renewable Is this a reliable source of energy? yes Picture of the wind turbine? 
Nuclear	What is nuclear energy? the energy released during nuclear fission or fusion, especially when used to generate electricity. How to harvest nuclear energy? The two main ways that nuclear energy can be harvested is through nuclear fission and nuclear fusion Is this renewable or non renewable energy? Non-Renewable Is this a reliable source of energy? yes Picture of a nuclear power station ? 
Solar Energy	What is solar energy? Solar energy is simply **the light and heat that come from the sun** How to harvest solar energy? Solar technologies convert sunlight into electrical energy

	either through photovoltaic panels or through mirrors that concentrate solar radiation Is this renewable or non renewable energy? Renewable Is this a reliable source of energy? Yes Picture of Solar Cell 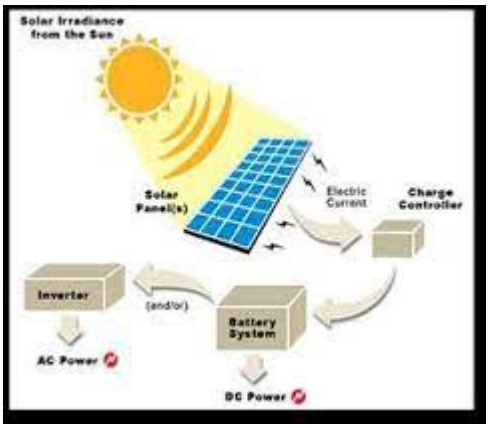
Fossil Fuel	What is fossil fuel? a natural fuel such as coal or gas, formed in the geological past from the remains of living organisms How to harvest fossil fuel? There are two main methods for removing fossil fuels from the ground: mining and drilling. Is this a renewable or non renewable energy? Non- Renewable Is this a reliable source of energy? no Picture of Fossil fuel? 

Series Circuit vs Parallel Circuit

Series circuits are circuits where the loads are connected side by side. Parallel circuit are connected in ladders.

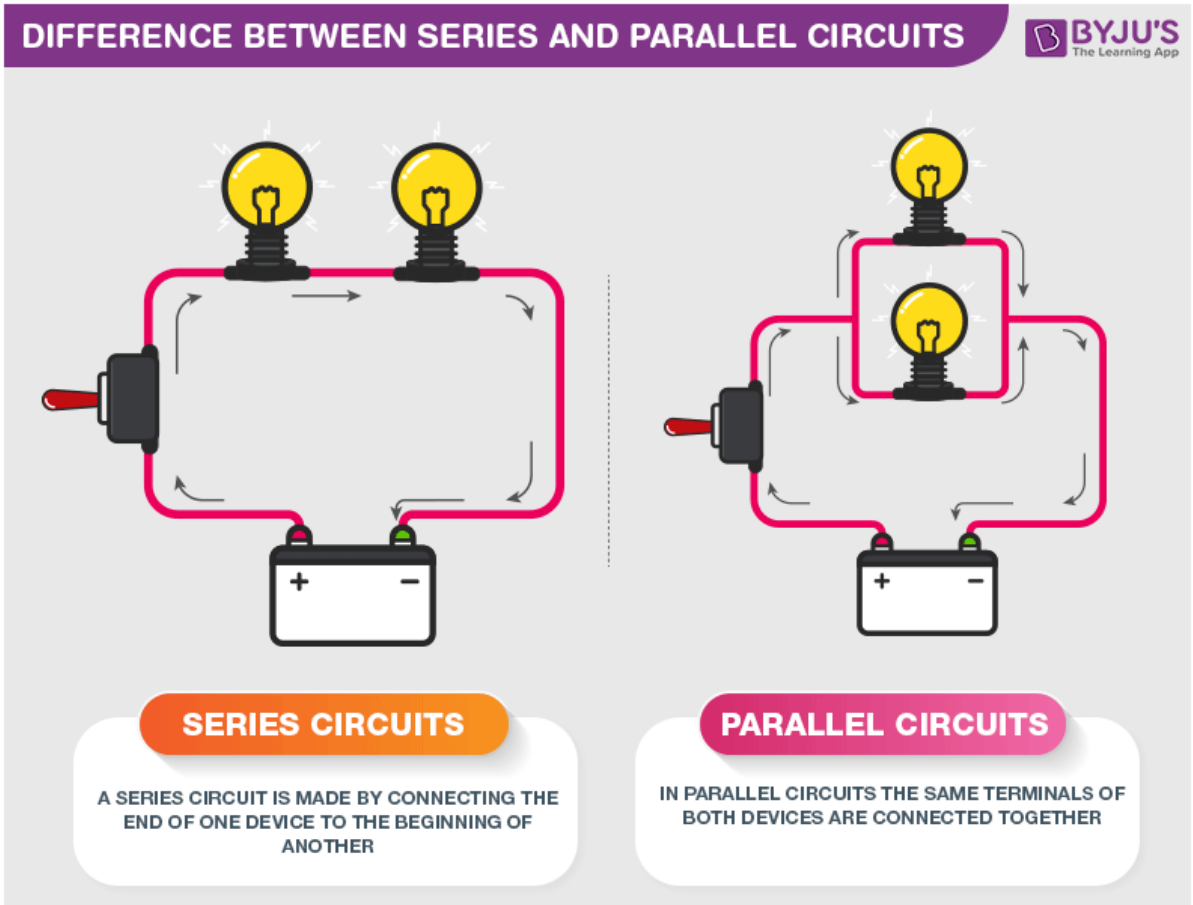

<u>Calculation</u>

The diagram below shows the series circuit. Find

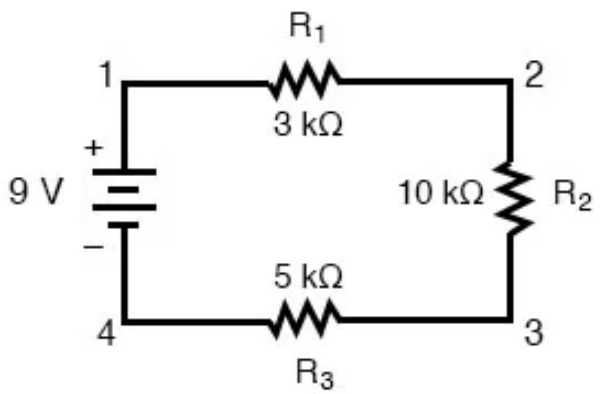

a) Total Resistance
b) Voltage across R1

c) Voltage across R2
d) Voltage across R3

Solution:

A.18k Ohm

B.
V = IR
9 = $I\ (18000)$
$I\ =\ 0.0005\ A$
$V_{R1} = IR\ =\ 0.0005\ \times\ 3000\ =\ 1.5V$

C. Total R = 18000 ohm
V = IR
9 = $I\ (18000)$
$I\ =\ 0.0005\ A$
$V_{R2} = IR\ =\ 0.0005\ \times\ 10000\ =\ 5V$

D.Total R = 18000 ohm
V = IR
9 = $I\ (18000)$
$I\ =\ 0.0005\ A$
$V_{R3} = IR\ =\ 0.0005\ \times\ 5000\ =\ 2.5V$

Calculation

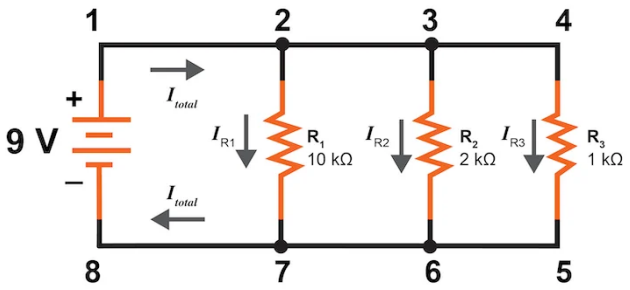

Find the

a) Total Resistance
b) Voltage across R1
c) Voltage across R2
d) Voltage across R3
e) I_{R1}
f) I_{R2}
g) I_{R3}
h) I_{Total}

Solution

a. $$\frac{1}{R\,Total} = \frac{1}{10k} + \frac{1}{2k} + \frac{1}{1k}$$

$$\frac{1}{R\,Total} = \frac{1}{10k} + \frac{1\times5}{2k\times5} + \frac{1\times10}{1k\times10}$$

$$\frac{1}{R\,Total} = \frac{1+5+10}{10k} = \frac{16}{10k}$$

$$\frac{R\,Total}{1} = \frac{10k}{16}$$

Total Resistance = 625 Ohm

b. Voltage across R1 = 9V
c. Voltage across R2 = 9V
d. Voltage across R3 = 9V
e. $V_{R1} = I_{R1}R_{R1}$

$9 = I_{R1}(10\,000)$

$I_{R1} = 0.0009\ A$

f. $V_{R2} = I_{R2}R_{R2}$

$9 = I_{R2}(2\,000)$

$I_{R2} = 4.5 \times 10^{-3}$

g. $.V_{R3} = I_{R3}R_{R3}$

$9 = I_{R3}(1000)$

$I_{R3} = 0.009\ A$

h. $I_{total} = I_{R1} + I_{R2} + I_{R3}$

$I_{total =}$ 0.0144

Calculation

A series-parallel combination circuit

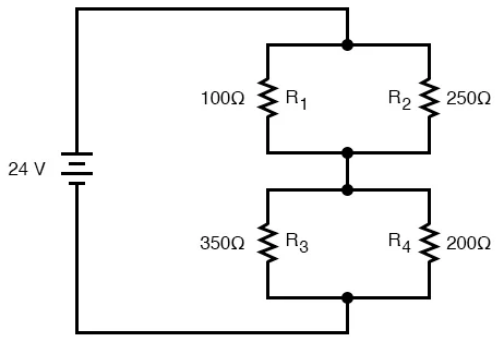

Find the Total Resistance ?

$$R_{Total} = Ra + Rb$$

$$\frac{1}{R\,a} = \frac{1}{100} + \frac{1}{250}$$

$$= \frac{250+100}{2500} = \frac{350}{2500}$$

$$\frac{1}{R\,a} = \frac{350}{2500}$$

$$R_a = \frac{2500}{350} = 7.14\Omega$$

$$\frac{1}{R\,a} = \frac{1}{350} + \frac{1}{200}$$

$$\frac{1}{R\,a} = \frac{200 + 350}{(350)\times(200)}$$

$$= \frac{350+200}{7000} = \frac{550}{7000}$$

$$\frac{1}{R\,a} = \frac{7000}{550}$$

$$R_a = \frac{7000}{550} = 12.72\Omega$$

$$R_{Total} = 7.14 + 12.72 = 19.86$$

Theory Kinetic of Gas

Definition of Theory Kinetic of Gas which states that gas behaviour based on the molecular motion called kinetic theory of gases.

1. Molecules of gas are very small and far apart from each other.
2. Gas is in constant ***random*** motion. (***Brownian motion)***
3. Gas molecules are moving in a straight line.
4. Gas molecules collide with each other
5. Collision of the gas molecules on the wall of the container produces pressure of the gas
6. There is no kinetic energy loss during the collision of the gas molecules and the wall of the container. ***Perfectly Elastic collisions***
7. Gas molecules do not exhibit attractive or repulsive force on each other during the process of collisions.

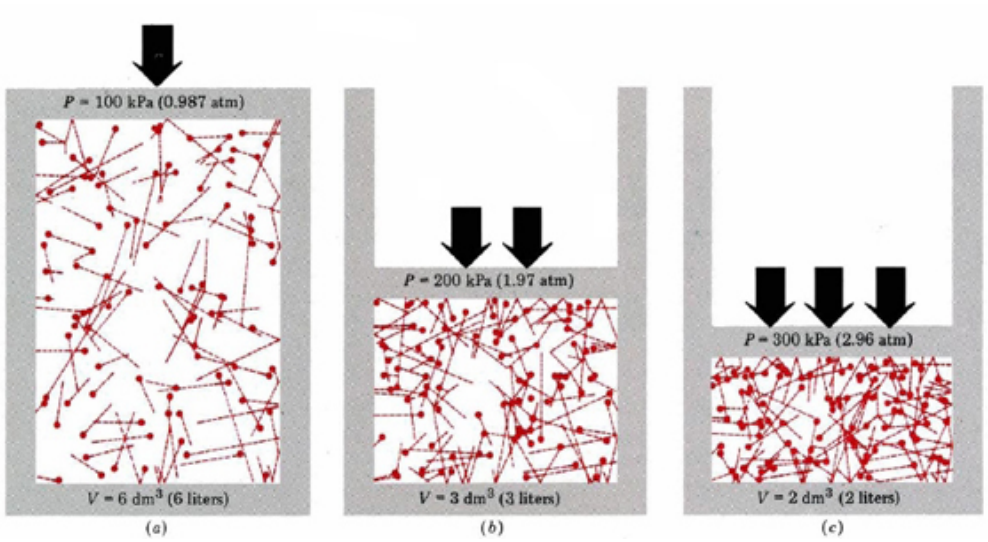

Gas molecules obey the very basic principle of thermodynamics (thermodynamics, **science of the relationship between heat, work, temperature, and energy**.)

Few law of thermodynamics

- **First Law:** Law of conservation of energy *(Energy can change form only but you cannot create them or destroy them)*
- **Second Law** : Entropy of an isolated system. *(Gas has higher entropy and higher disorder, Solid has less entropy and less disorder)*
- **Third law** : Entropy of a system approaches a constant as temperature approaches absolute zero *(At absolute temperature, the entropy becomes constant)*

<u>Definition of</u>

Temperature: Temperature is the degree of hotness. Temperature is measure in celsius and Kelvin

Heat : The amount of energy needed to raise the temperature. Heat is measure in joule

Thermal Equilibrium

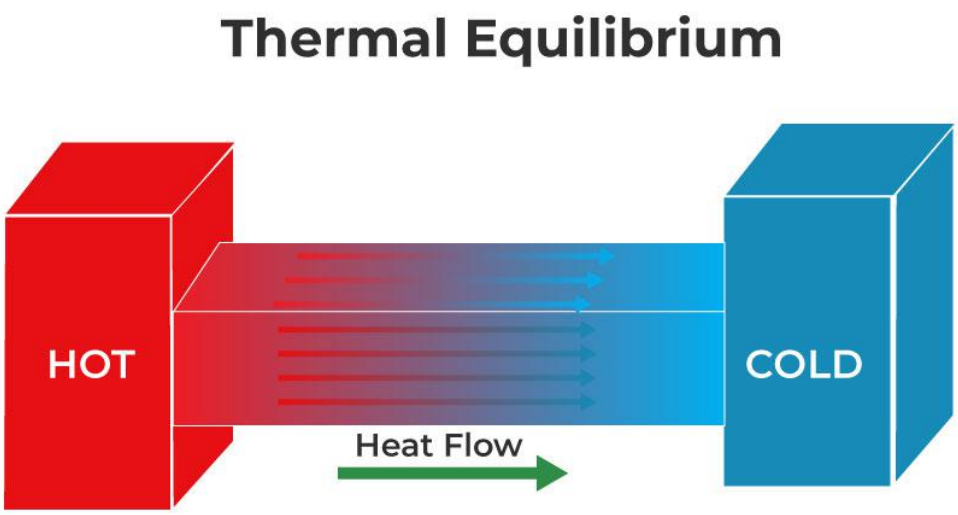

- Heat will flow from a hot region to cold region
- Heat can be transferred via conduction, radiation, convection
- The heat will stop flowing when both objects achieve a final temperature where both objects will have the same temperature.

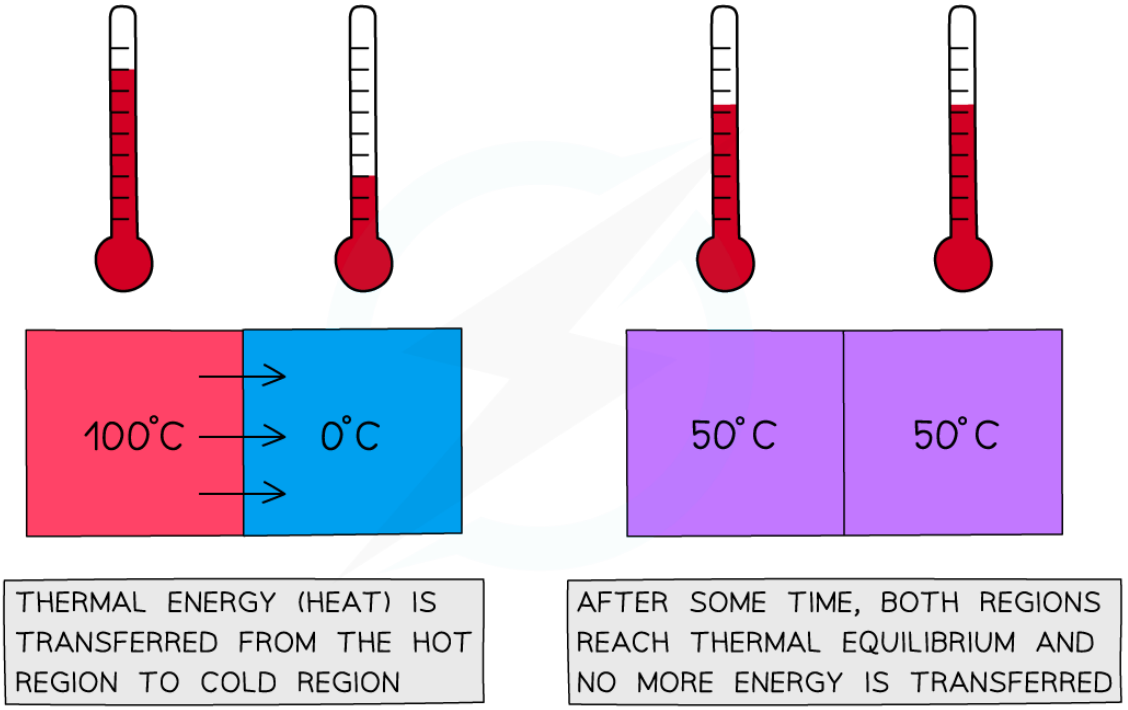

Specific Heat Capacity and Latent heat Capacity

Specific Heat Capacity Formula

$$Q = mc\theta$$

m = mass	(kg)
c = specific heat capacity	(J kg^{-1} $^{o}C^{-1}$)
θ = temperature change	(^{o}C)

The specific heat capacity is defined as **the quantity of heat (J) absorbed per unit mass (kg) of the material when its temperature increases 1 K (or 1 °C)**, and its units are J/(kg K) or J/(kg °C).

Why do you need to use this formula

- Every object has their ability to absorb and release energy.
- Large specific heat capacity means the ability to absorb more energy before the temperature increases
- Small specific heat capacity means the ability to release energy when heat is provided

Application and advantages of specific heat capacity in daily life

Advantages of High Specific Heat Capacity	Advantages of Low specific Heat Capacity
Car cooling system (Radiator of the Car) - A radiator is to cool down the car. - In the car radiator it is filled with water. - **Water has high specific heat capacity** - A high specific heat capacity is able to absorb heat from the engine thus keeping the engine cool	A low specific heat capacity has its own advantage. Cooking utensils are made of low specific heat capacity. Wok is made of metal that is low in specific heat capacity. It can be heated up easily and can be used as a cooking tool.